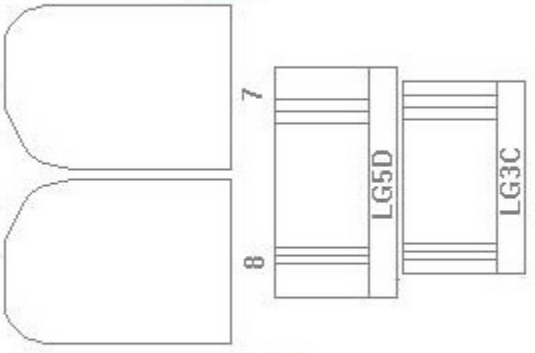
7
8
LG5D
LG3C

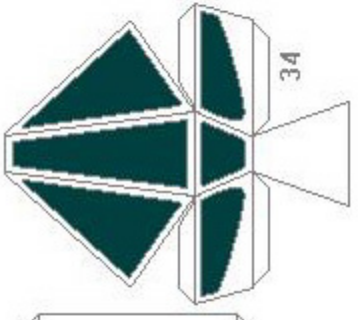
34

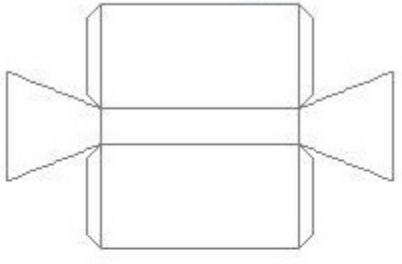

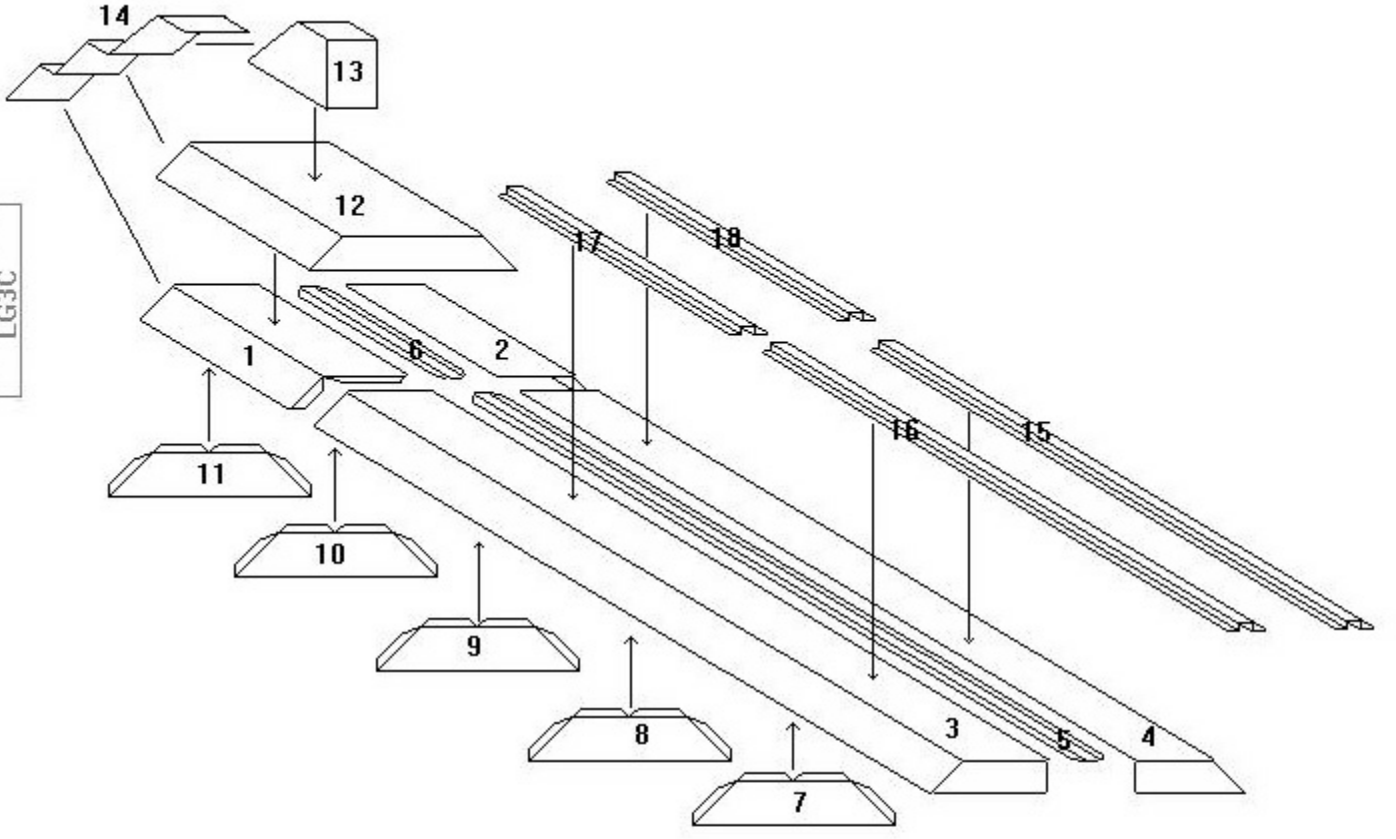
14
13
12
17
18
1
6
2
16
15
11
10
9
8
7
3
5
4

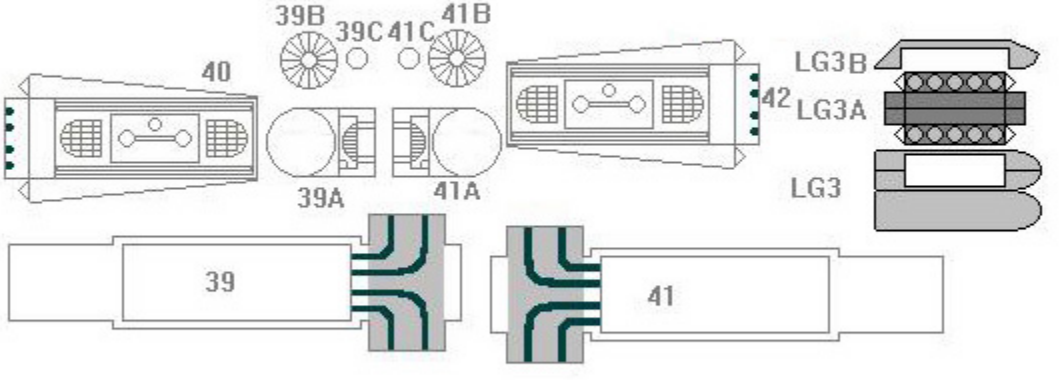
39B
39C
41C
41B
40
42
LG3B
LG3A
LG3
39A
41A
39
41